THERMA-TRU® DOORS

L. F. SCHMIDT LICENSE No. 43409 STATE OF FLORIDA PROFESSIONAL ENGINEER

Digitally signed by Lyndon F Schmidt
Date: 2025.02.11 12:12:04 -05'00'

This item has been digitally signed and sealed by **L. F. Schmidt, P.E.** on the date adjacent to the seal.

Printed copies of this document are not considered signed and sealed and the signature must be verified on any electronic copies.

THIS PRODUCT APPROVAL IS VALID ONLY FOR THE STATE OF FLORIDA

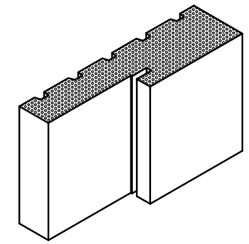

"COMPOSITE JAMB"

OUTSWING "IMPACT"

GENERAL NOTES

1. This product anchoring drawing has been evaluated and is in compliance with the 8th Edition (2023) Florida Building Code (FBC) structural requirements including the "High Velocity Hurricane Zone" (HVHZ). See the Certification Agency Certificate for sizes, specifications & ratings.
2. Product anchors shall be as listed and spaced as shown on details. Anchor embedment to base material shall be beyond wall dressing or stucco.
3. When used in *the "HVHZ", this product complies with Section 1626 of the FBC and does not require an impact resistant covering*.
4. This "IMPACT" door jamb, as a component, is to be used as a substitute to a similar door jamb in an "Impact" approved (complies with FBC Section 1626) door system possessing a current Florida Statewide Product Approval *(Including the "HVHZ")*. In addition, the door jamb may also be used as a substitute for an approved Therma-Tru outswing sidelite sill.
5. The design pressure rating of the assembly shall be the lesser of the design pressure for the door jamb shown in this approval or the design pressure of the "Impact" door assembly used in conjunction with this approval.
6. The maximum frame size of the door assembly shall be lesser of the maximum frame size stated in this approval or the maximum frame size of the "Impact" door assembly approval used in conjunction with this approval.
7. This product is approved for use with "Impact" opaque fiberglass side hinged swing doors and sidelites only.
8. Refer to the separate Florida Product Approval for the swing door used in conjunction with this component approval to determine the ability of the system to meet the water infiltration requirements for the "HVHZ".
9. Air and water infiltration qualifications to be reviewed by the Building Official.

TABLE OF CONTENTS

SHEET #	DESCRIPTION
1	Typical elevations, design pressures & general notes
2	Elevations
3	Horizontal cross sections
4	Vertical cross sections
5	Buck anchoring
6	Frame anchoring
7	Bill of materials & components

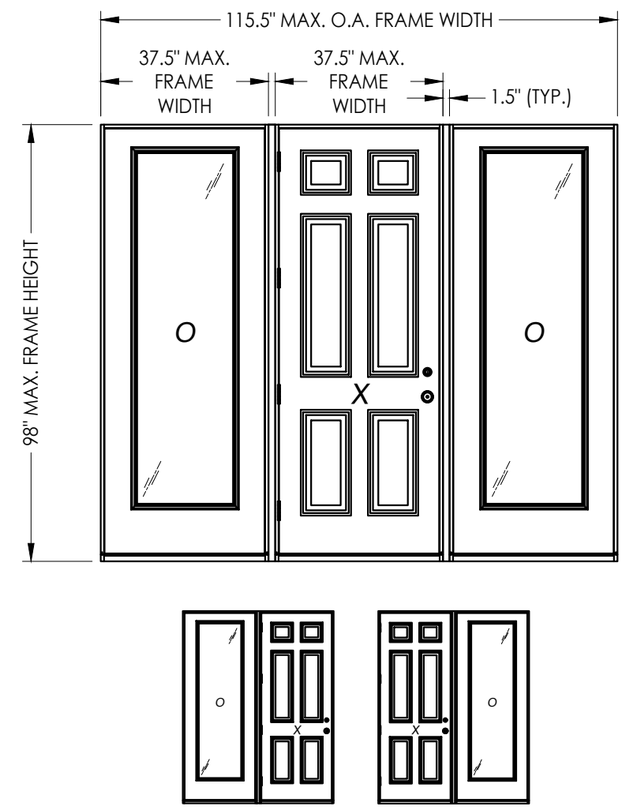

CONFIGURATION	MAX. FRAME DIMENSION	DESIGN PRESSURE (PSF) OUTSWING	
		POSITIVE	NEGATIVE
OX, XO, OXO	115.5" x 98.0"	+50.0	-50.0

Documents Prepared By:
Lyndon F. Schmidt
P.E. No. 43409
RW BUILDING CONSULTANTS, INC.
P.O. Box 230, Valrico, FL 33595
Phone No.: 813.659.9197
FBPE Registry No. 9813

PRODUCT: THERMA-TRU COMPONENTS

PART OR ASSEMBLY: TYPICAL ELEVATION, DESIGN PRESSURES & GENERAL NOTES

NO.	DATE	BY

REVISIONS

DATE: 2/10/25
SCALE: N.T.S.
DWG. BY: LFS
CHK. BY: RW
DRAWING NO.: FL-47296.3
SHEET 1 OF 7

© 2025 R.W. BUILDING CONSULTANTS INC.

Z:\2023 FBC Drawings\Therma-Tru\FL-47296\FL-47296.3.dwg

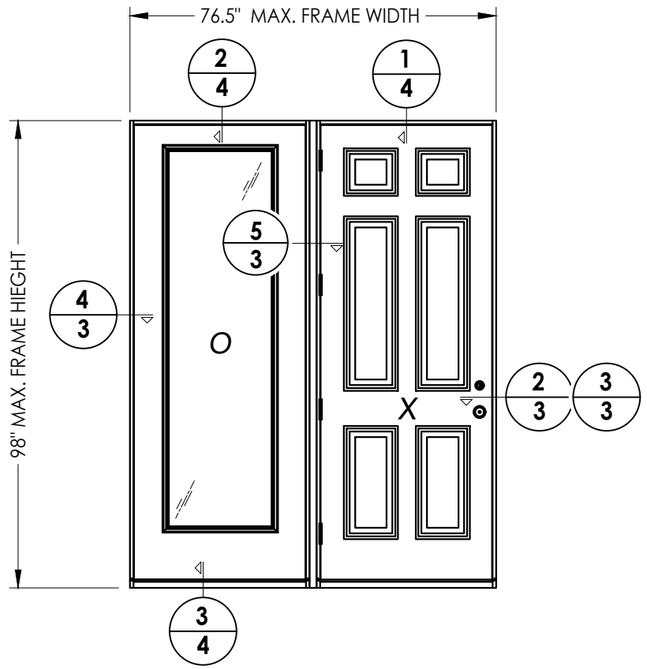

SINGLE DOOR (CENTER-HINGED) w/ SIDELITE

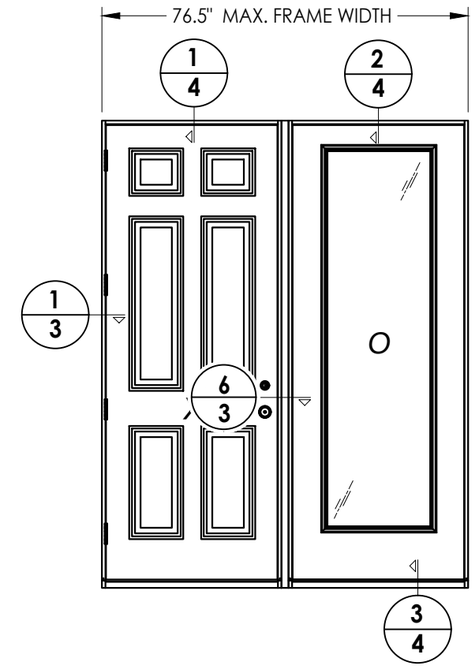

SINGLE DOOR w/ SIDELITE

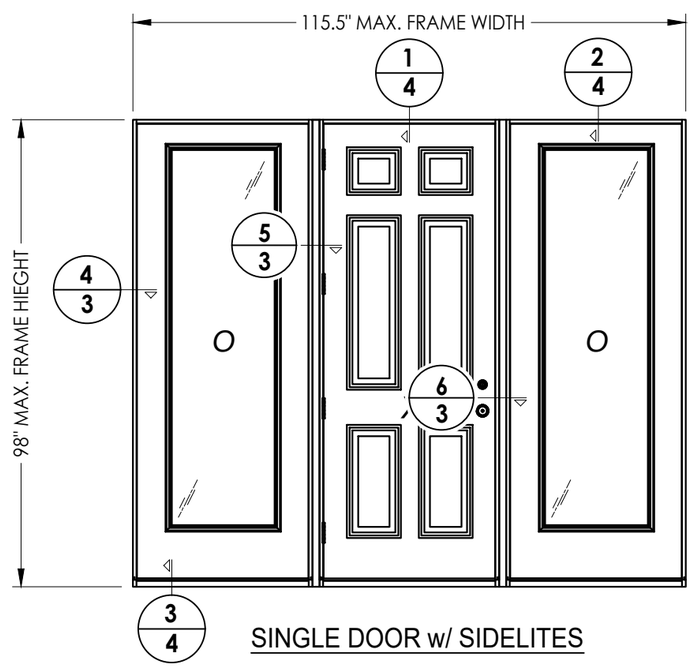

SINGLE DOOR w/ SIDELITES

Documents Prepared By:
Lyndon F. Schmidt
P.E. No. 43409

RW BUILDING CONSULTANTS, INC.
P.O. Box 230, Valrico, FL 33595
Phone No.: 813.659.9197
FBPE Registry No. 9813

PRODUCT: THERMA-TRU COMPONENTS

PART OR ASSEMBLY: ELEVATIONS

NO.	DATE	REVISIONS	BY

DATE: 2/10/25
SCALE: N.T.S.
DWG. BY: LFS
CHK. BY: RW
DRAWING NO.: FL-47296.3
SHEET 2 OF 7

© 2025 R.W. Building Consultants Inc.

Z:\2023 FBC Drawings\Therma-Tru\FL-47296\FL-47296.3.dwg

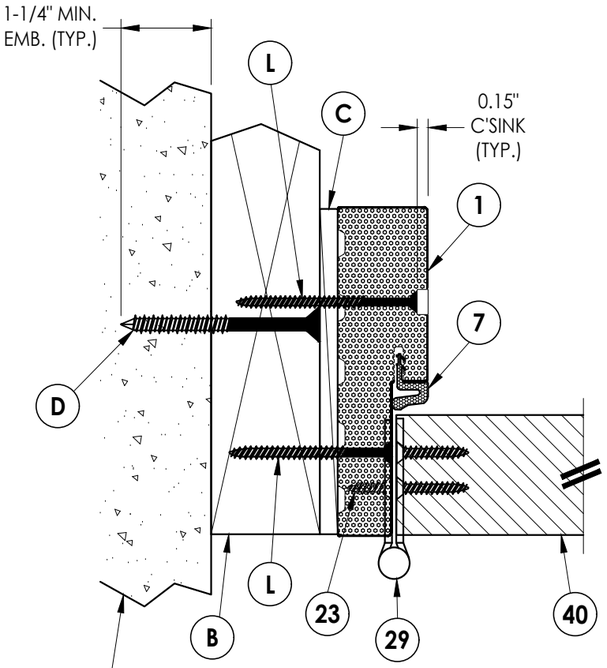

1/3 HORIZONTAL CROSS SECTION
2X Buck Construction

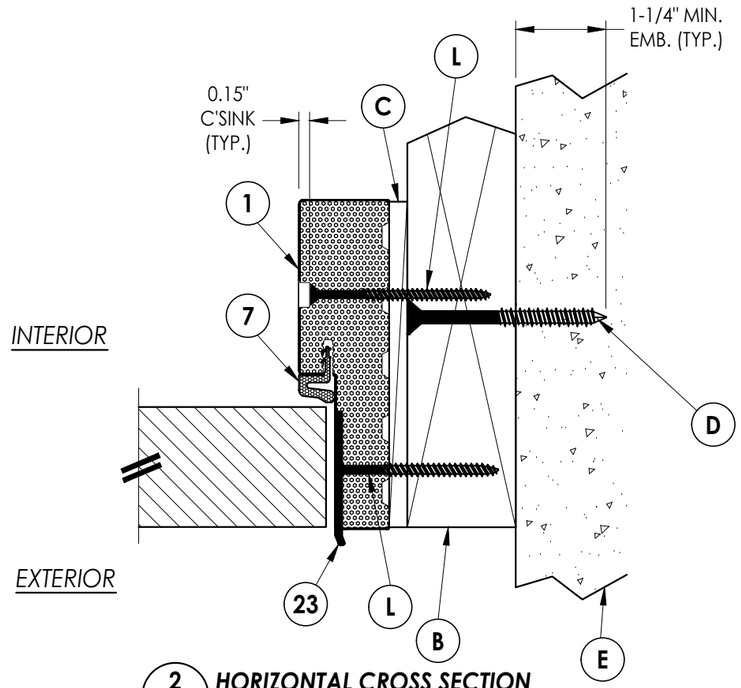

2/3 HORIZONTAL CROSS SECTION
2X Buck Construction

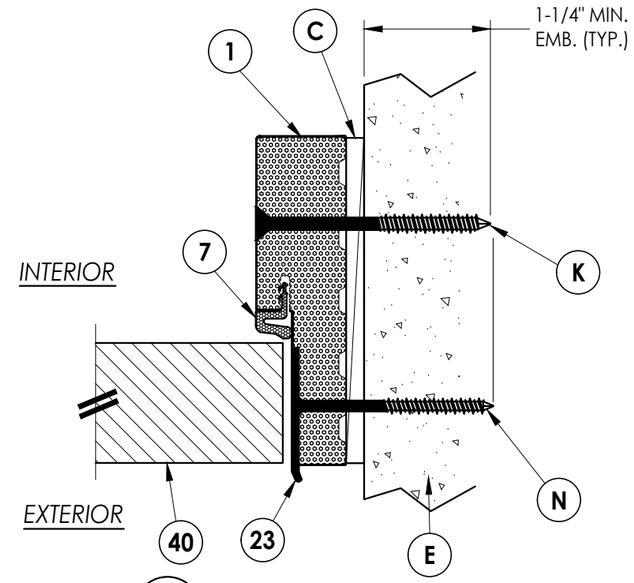

3/3 HORIZONTAL CROSS SECTION
Shown Direct to masonry

NOTE:
SEE SEPARATE SIDE-HINGED DOOR PRODUCT APPROVAL FOR DOOR CONSTRUCTION DETAILS NOT SHOWN, INCLUDING LOCK HARDWARE, ASTRAGAL, HINGE AND THRESHOLD CONNECTIONS.

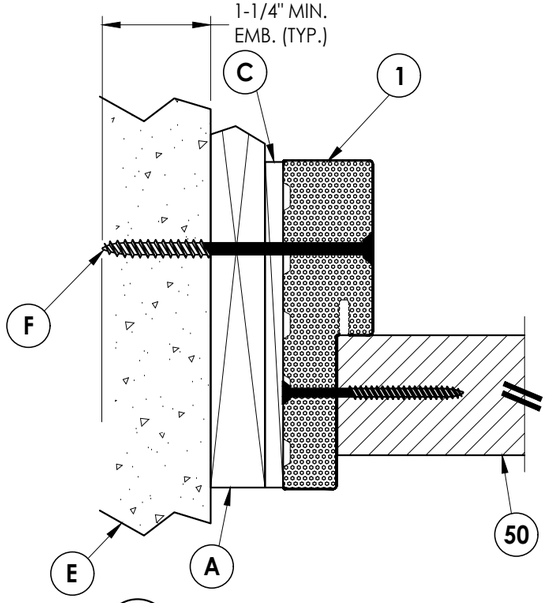

4/3 HORIZONTAL CROSS SECTION
Shown w/1X sub-buck

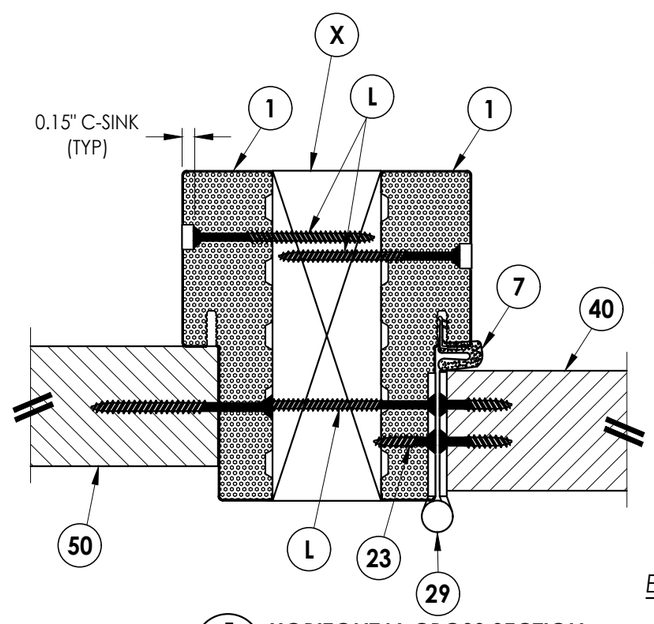

5/3 HORIZONTAL CROSS SECTION

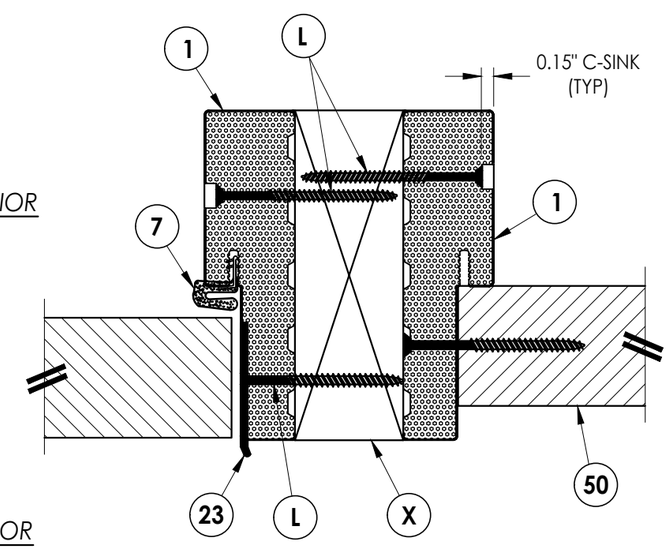

6/3 HORIZONTAL CROSS SECTION

Documents Prepared By:
Lyndon F. Schmidt
P.E. No. 43409

RW BUILDING CONSULTANTS, INC.
P.O. Box 230, Valrico, FL 33595
Phone No.: 813.659.9197
FBPE Registry No. 9813

PRODUCT: THERMA-TRU COMPONENTS

PART OR ASSEMBLY: HORIZONTAL CROSS SECTIONS

NO.	DATE	REVISIONS	BY

DATE: 2/10/25
SCALE: N.T.S.
DWG. BY: LFS
CHK. BY: RW
DRAWING NO.: FL-47296.3
SHEET 3 OF 7

© 2025 R.W. BUILDING CONSULTANTS INC.

Z:\2023 FBC Drawings\Therma-Tru\FL-47296\FL-47296.3.dwg

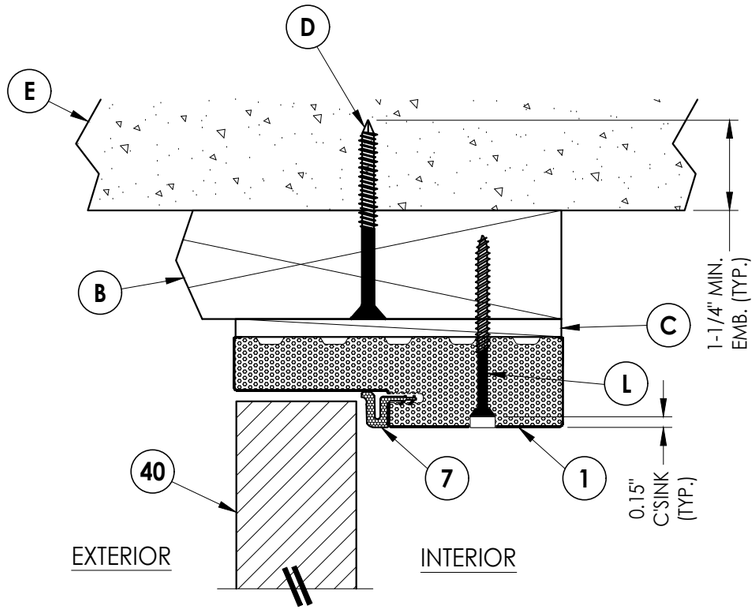

1/4 VERTICAL CROSS SECTION
2X Buck Construction - Single door

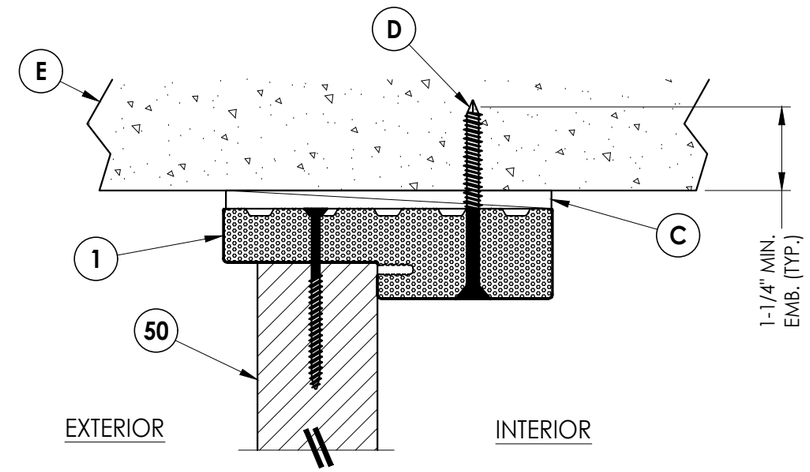

2/4 VERTICAL CROSS SECTION
Shown Direct to Masonry

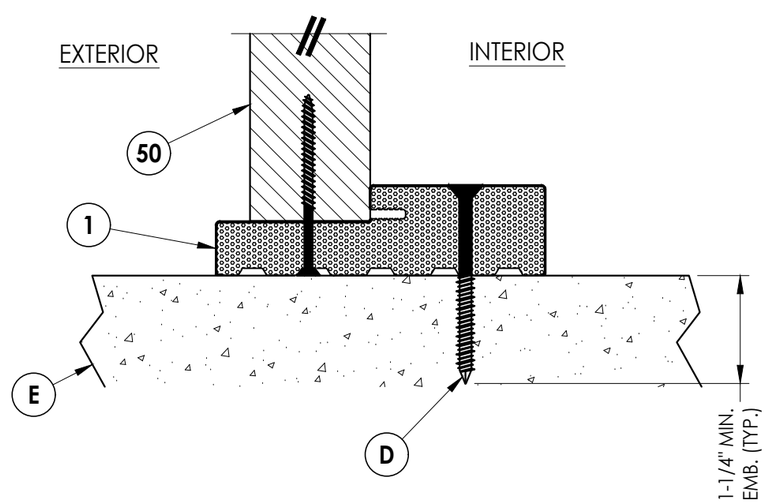

3/4 VERTICAL CROSS SECTION
Shown Direct to Masonry
Outswing Sill Only

NOTE:
SEE SEPARATE SIDE-HINGED DOOR PRODUCT APPROVAL FOR DOOR CONSTRUCTION DETAILS NOT SHOWN, INCLUDING LOCK HARDWARE, ASTRAGAL, HINGE AND THRESHOLD CONNECTIONS.

Documents Prepared By:
Lyndon F. Schmidt
P.E. No. 43409
RW BUILDING CONSULTANTS, INC.
P.O. Box 230, Valrico, FL 33595
Phone No.: 813.659.9197
FBPE Registry No. 9813

PRODUCT: THERMA-TRU COMPONENTS

PART OR ASSEMBLY: VERTICAL CROSS SECTIONS

NO.	DATE	REVISIONS	BY

DATE: 2/10/25
SCALE: N.T.S.
DWG. BY: LFS
CHK. BY: RW
DRAWING NO.: FL-47296.3
SHEET 4 OF 7

© 2025 R.W. Building Consultants Inc.

Z:\2023 FBC Drawings\Therma-Tru\FL-47296\FL-47296.3.dwg

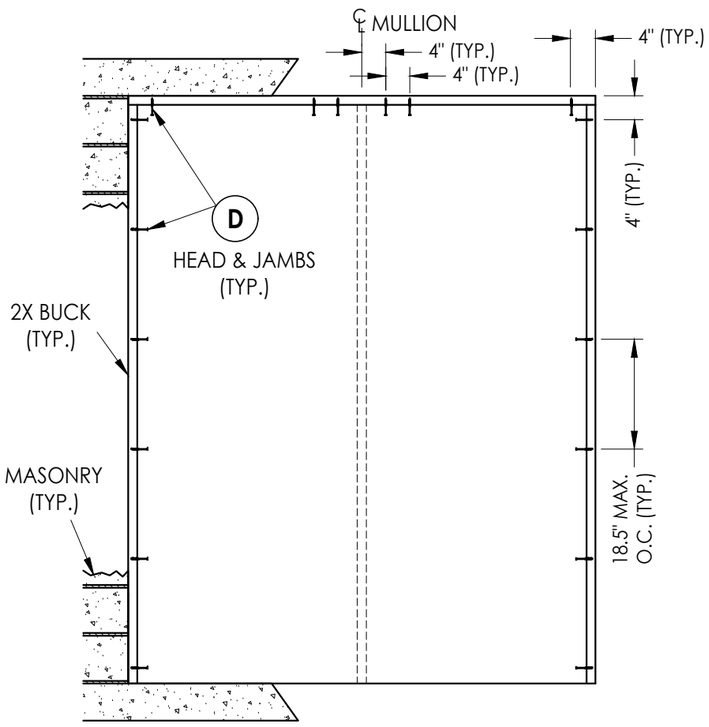

XO/OX

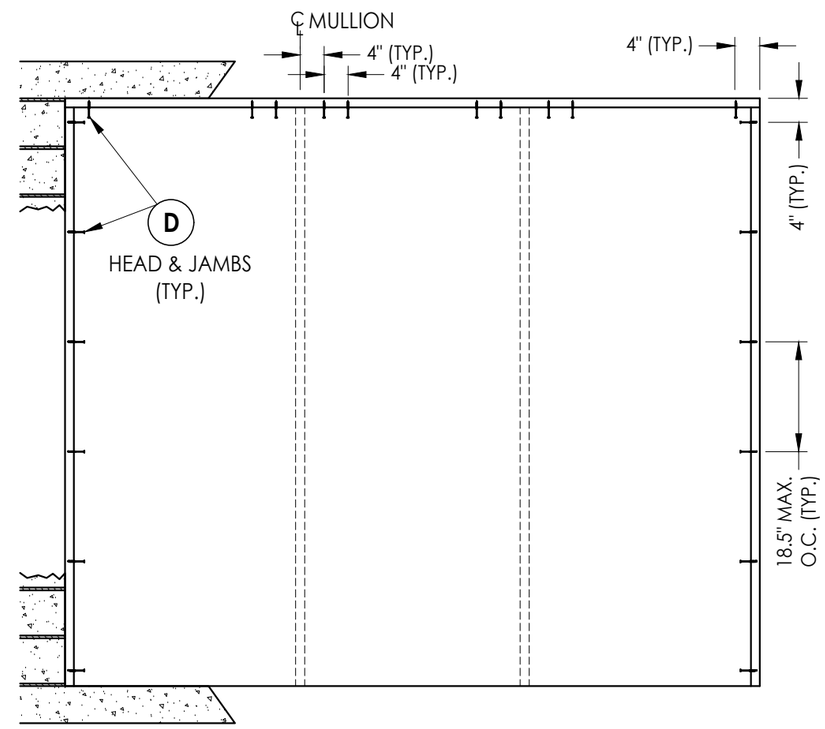

OXO

Documents Prepared By:
Lyndon F. Schmidt
P.E. No. 43409
RW BUILDING CONSULTANTS, INC.
P.O. Box 230, Valrico, FL 33595
Phone No.: 813.659.9197
FBPE Registry No. 9813

PRODUCT: THERMA–TRU COMPONENTS

PART OR ASSEMBLY: BUCK ANCHORING

NO.	DATE	BY

REVISIONS

DATE: 2/10/25
SCALE: N.T.S.
DWG. BY: LFS
CHK. BY: RW
DRAWING NO.: FL–47296.3
SHEET 5 OF 7

© 2025 R.W. BUILDING CONSULTANTS INC.

Z:\2023 FBC Drawings\Therma-Tru\FL-47296\FL-47296.3.dwg

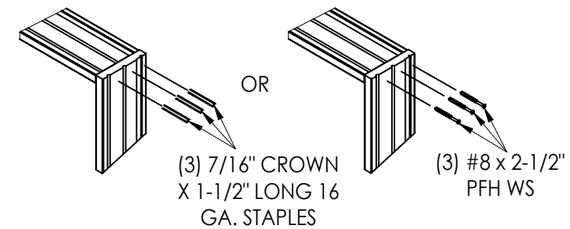

JAMB TO HEAD/SILL DETAIL
(TYP.)

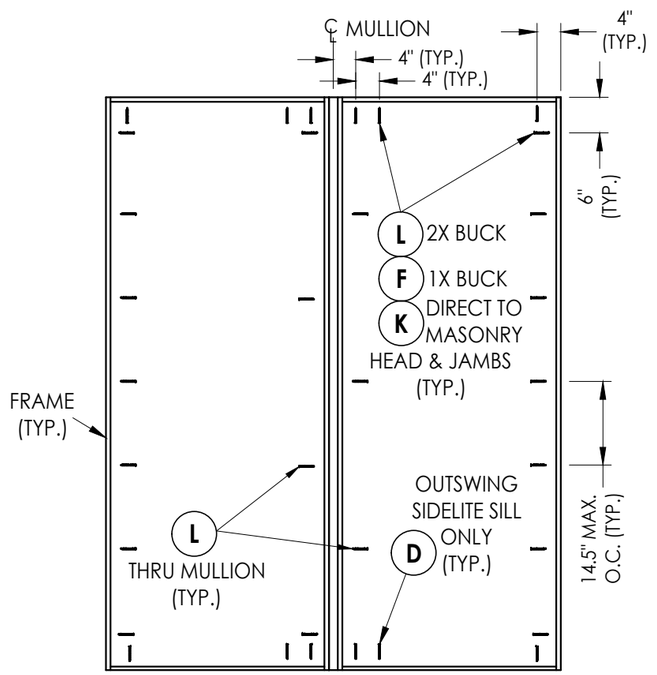

XO/OX

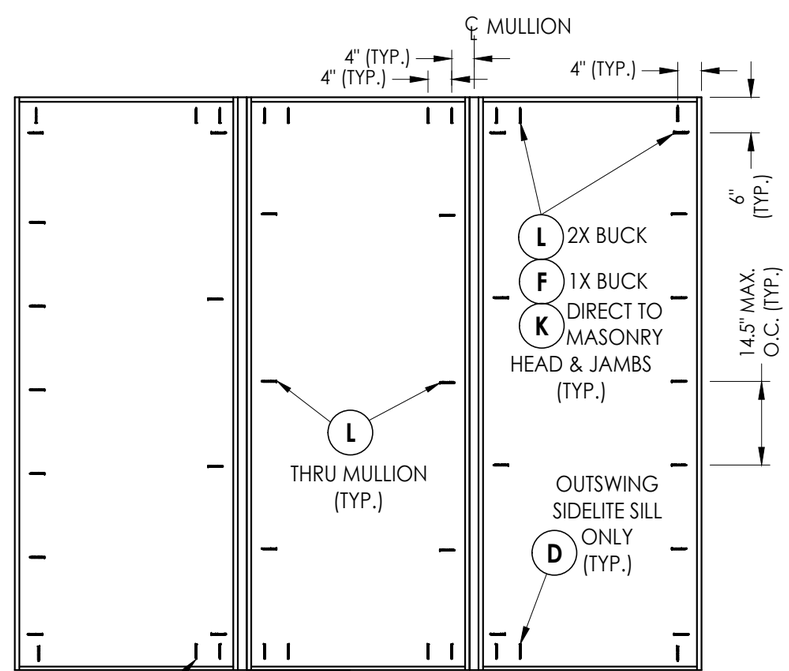

OXO

NOTE:
SEE SEPARATE SIDE-HINGED DOOR PRODUCT APPROVAL FOR DOOR THRESHOLD CONNECTIONS (TYP.).

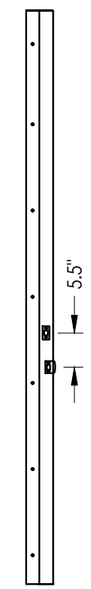

STRIKE JAMB

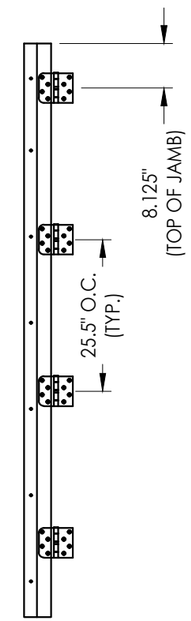

HINGE JAMB

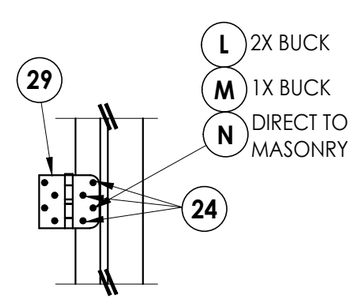

HINGE DETAIL

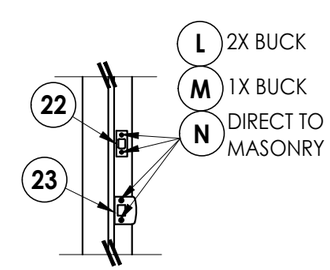

LATCH & DEADBOLT DETAIL

Documents Prepared By:
Lyndon F. Schmidt
P.E. No. 43409

RW BUILDING CONSULTANTS, INC.
P.O. Box 230, Valrico, FL 33595
Phone No.: 813.659.9197
FBPE Registry No. 9813

PRODUCT: THERMA-TRU COMPONENTS

PART OR ASSEMBLY: FRAME ANCHORING

NO.	DATE	REVISIONS	BY

DATE: 2/10/25
SCALE: N.T.S.
DWG. BY: LFS
CHK. BY: RW
DRAWING NO.: FL-47296.3
SHEET 6 OF 7

© 2025 R.W. Building Consultants Inc.

Z:\2023 FBC Drawings\Therma-Tru\FL-47296\FL-47296.3.dwg

BILL OF MATERIALS		
ITEM #	DESCRIPTION	MATERIAL
A	1X BUCK (G >= 0.42)	WOOD
B	2X BUCK (G >= 0.42)	WOOD
C	1/4" MAX. SHIM SPACE	-
D	1/4" X 2-3/4" PFH DeWALT OR ITW CONCRETE SCREW	STEEL
E	MASONRY - 3,000 PSI MIN. CONCRETE CONFORMING TO ACI 301 OR HOLLOW BLOCK CONFORMING TO ASTM C90	CONCRETE
F	1/4" X 3-3/4" PFH DeWALT OR ITW CONCRETE SCREW	STEEL
L	#10 X 2-1/2" PFH WOOD SCREW (1.15" MIN. EMBEDMENT)	STEEL
K	1/4" X 3-1/4" PFH DeWALT OR ITW CONCRETE SCREW	STEEL
M	3/16" X 3-1/4" PFH ITW CONCRETE SCREW	STEEL
N	3/16" X 2-3/4" PFH TW CONCRETE SCREW	STEEL
X	2X REINFORCEMENT (G >= 0.55)	WOOD
1	HEAD, SIDE JAMB, & OUTSWING SIDELITE SILL	COMPOSITE
7	WEATHERSTRIP	FOAM
22	DEADBOLT STRIKE PLATE	STEEL
23	LATCH STRIKE PLATE	STEEL
24	#10 X 3/4" PFH SMS	STEEL
29	4" X 4" HINGE	STEEL
40	DOOR PANEL	-
50	SIDELITE PANEL	-

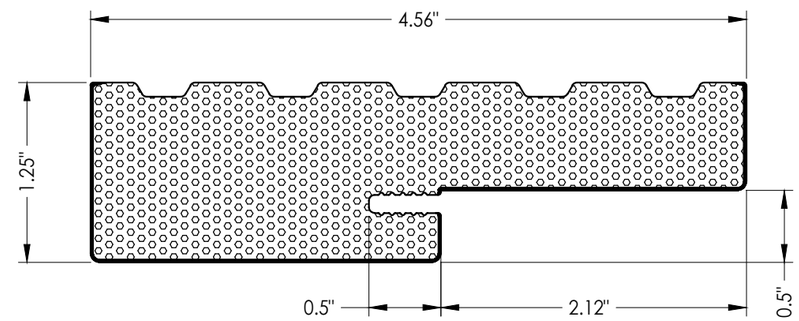

1 **HEAD, SIDE JAMB, & OUTSWING SIDELITE SILL**

CONCRETE ANCHOR NOTES:

1. *Concrete anchor locations at the corners may be adjusted to maintain the min. edge distance to mortar joints.*
2. *Concrete anchor locations noted as "MAX. ON CENTER" must be adjusted to maintain the min. edge distance to mortar joints, additional concrete anchors may be required to ensure the "MAX. ON CENTER" dimension are not exceeded.*
3. *Concrete anchor table:*

ANCHOR TYPE	ANCHOR SIZE	MIN. EMBEDMENT	MIN. CLEARANCE TO MASONRY EDGE	MIN. CLEARANCE TO ADJACENT ANCHOR
ITW TAPCON®	3/16"	1-1/4"	3"	1-1/2"
ITW TAPCON®	1/4"	1-1/4"	2"	4"
DeWALT ULTRACON®	1/4"	1-1/4"	1"	4"

WOOD SCREW INSTALLATION NOTES:

1. *Maintain a minimum 5/8" edge distance, 1" end distance, & 1" o.c. spacing of wood screws to prevent the splitting of wood.*

Documents Prepared By:
Lyndon F. Schmidt
P.E. No. 43409
RW BUILDING CONSULTANTS, INC.
P.O. Box 230, Valrico, FL 33595
Phone No.: 813.659.9197
FBPE Registry No. 9813

PRODUCT: *THERMA-TRU COMPONENTS*

PART OR ASSEMBLY: *BILL OF MATERIALS & COMPONENTS*

REVISIONS

NO.	DATE	BY

DATE: 2/10/25
SCALE: N.T.S.
DWG. BY: LFS
CHK. BY: RW
DRAWING NO.: FL-47296.3
SHEET 7 OF 7

© 2025 R.W. BUILDING CONSULTANTS INC.

Z:\2023 FBC Drawings\Therma-Tru\FL-47296\FL-47296.3.dwg